DISCLAIMER: CUSTOM BOTTLE INC. ASSUMES NO RESPONSIBILITY FOR:

–FORM, FIT AND FUCTION OF CLOSURES
–SHELF LIFE AND/OR COMPATIBILITY OF INTENDED CONTENTS WITH THIS BOTTLE.

'T' AND 'E' DIMENSIONS ARE THE AVERAGE OF TWO MEASUREMENTS TAKEN 90° APART.

THE LIMITS OF OVALITY WILL BE DETERMINED PER APPICATION AS NECESSARY.

DIMENSIONS IN [ ] ARE IN MILLIMETERS
ALL OTHERS INDICATED ARE IN INCHES

This drawing subject to standard industry tolerances S.P.I.

CUSTOM BOTTLE APPROVAL:
APPROVED BY BP
DATE FEB. 1/11

CUSTOMER APPROVAL:
APPROVED BY .....
DATE .....

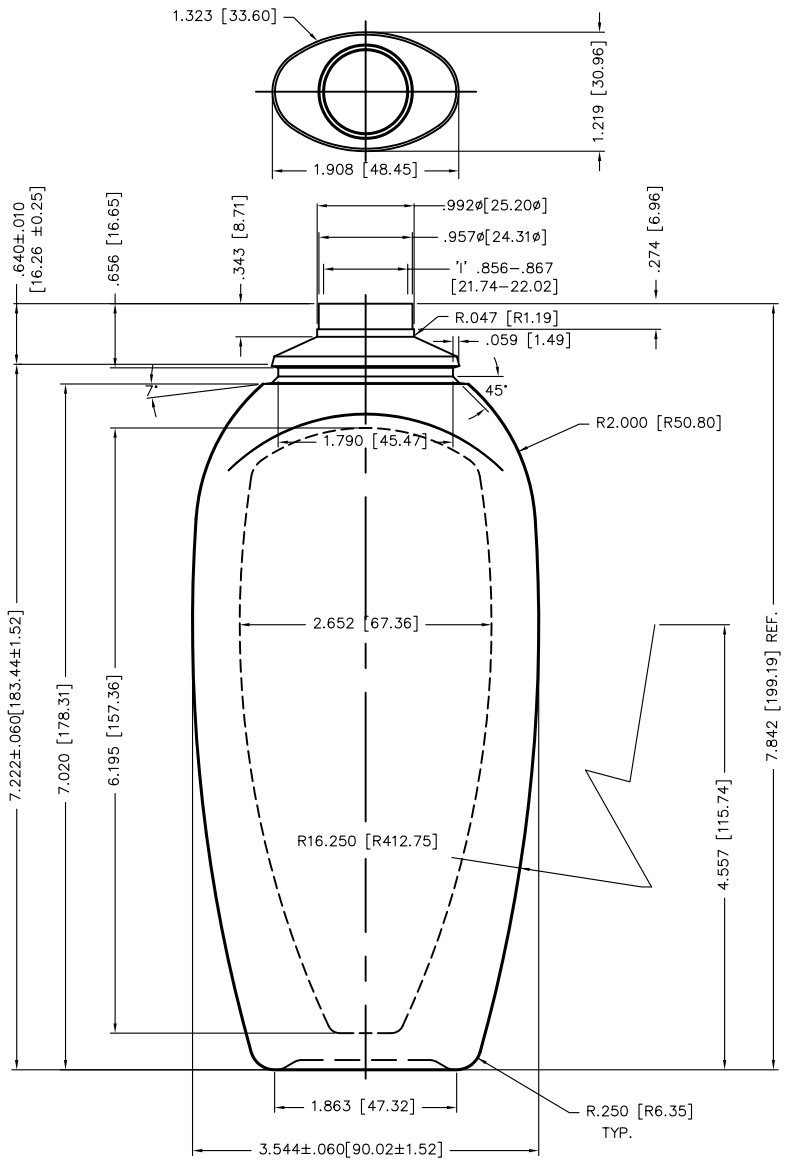

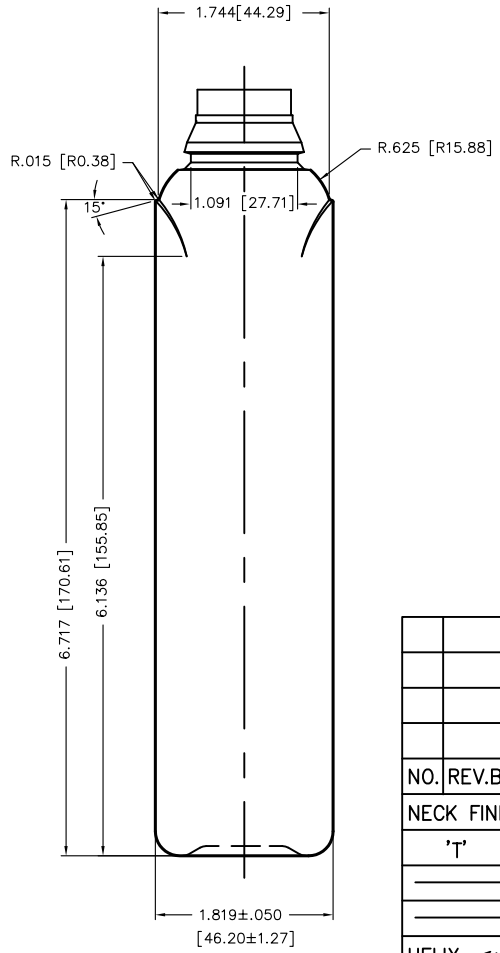

NOTE:

CLOSURE FOR BOTTLE IS:
SEE CUSTOM BOTTLE FOR CAP INFORMATION

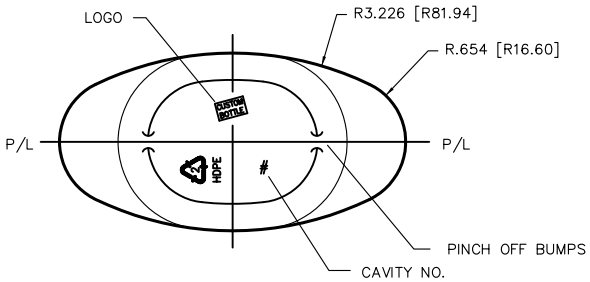

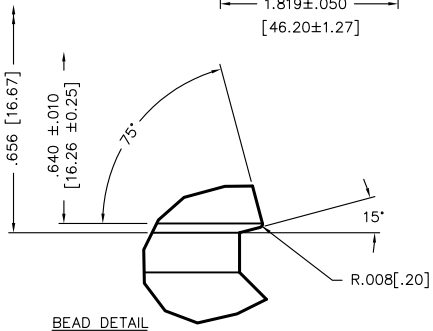

BEAD DETAIL
SCALE: 4–1

NO.	REV.BY	DESCRIPTION	DATE

NECK FINISH: 24mm SNAP	GRAM WT. 39 ±1.5

'T'	'E'	'H'	'S'	'L'	'I'

HELIX ∢: ——— T.P.I.: ——— CUTT. DIA.: ———

OVERFLOW CAPACITY BEFORE DECORATING 507ml ±11

CUSTOM BOTTLE

Custom Bottle Inc.
10 Great Hill Road
P.O. Box 720
Naugatuck, Connecticut 06770
203–723–6661

DRAWN BY: 1130	DESC.: 15oz TAPERED OVAL
SCALE: 1–1 DATE: FEB.24/03	DRAWING NO.: 107–5509–STOCK
BOTTLE MAT'L: HDPE	1
C.B.I.D.: #258	MOULD NO.: 6766 (NECK 9516)