DISCLAIMER: CUSTOM BOTTLE INC. ASSUMES NO RESPONSIBILITY FOR:

–FORM, FIT AND FUCTION OF CLOSURES
–SHELF LIFE AND/OR COMPATIBILITY OF INTENDED CONTENTS WITH THIS BOTTLE.

'T' AND 'E' DIMENSIONS ARE THE AVERAGE OF TWO MEASUREMENTS TAKEN 90° APART.

THE LIMITS OF OVALITY WILL BE DETERMINED PER APPICATION AS NECESSARY.

DIMENSIONS IN [ ] ARE IN MILLIMETERS
ALL OTHERS INDICATED ARE IN INCHES

This drawing subject to standard industry tolerances S.P.I.

CUSTOM BOTTLE APPROVAL:

APPROVED BY BP

DATE NOV. 23/10

CUSTOMER APPROVAL:

APPROVED BY .....

DATE .....

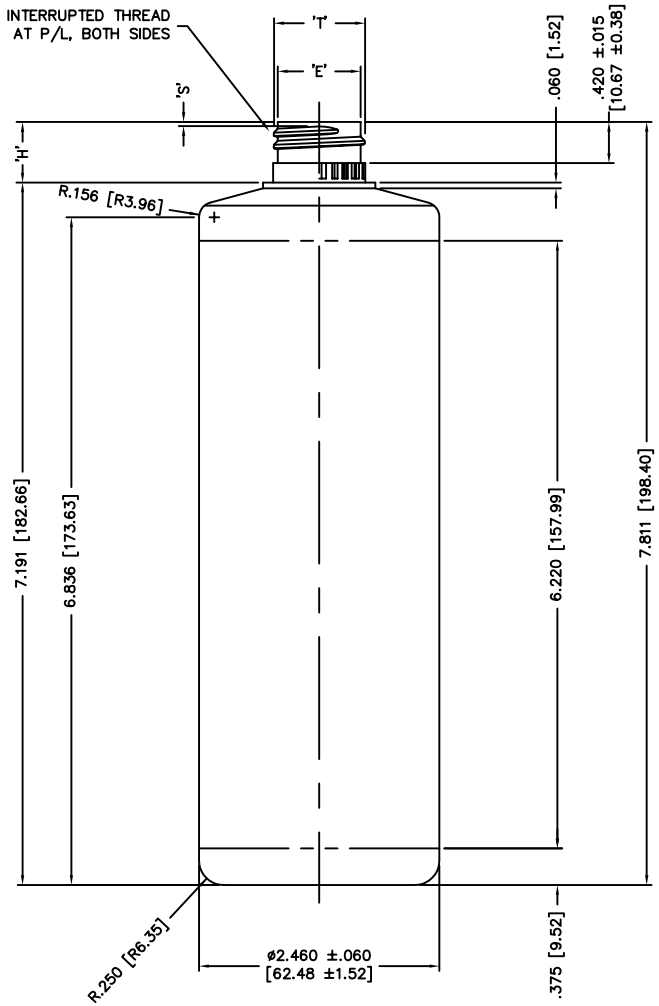

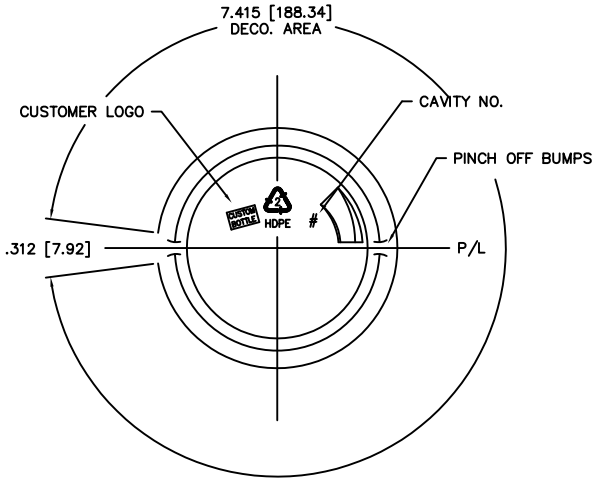

NO.	REV.BY	DESCRIPTION	DATE

NECK FINISH: 24mm RATCHET				GRAM WT. 31 ±3	
'T'	'E'	'H'	'S'	'L'	'I'
.932 ±.008	.848 ±.008	.640 ±.015	.046 ±.015	.437 MIN.	———
23.67 ±0.20	21.54 ±0.20	16.26 ±0.38	1.17 ±0.38	11.10 MIN.	———
HELIX ∢: 2° 34'		T.P.I.: 8		CUTT. DIA.: .375[9.53]	

OVERFLOW CAPACITY BEFORE DECORATING 525ml ±11

CUSTOM BOTTLE

Custom Bottle Inc.
10 Great Hill Road
P.O. Box 720
Naugatuck, Connecticut 06770
203–723–6661

DRAWN BY: 1130	DESC.: 16oz. COSMETIC CYL.
SCALE: 1–1 DATE: APR.29/09	DRAWING NO.: 1 107–8540–STOCK
BOTTLE MAT'L: HDPE	
C.B.I.D.: #92	MOULD NO.: