DISCLAIMER: CUSTOM BOTTLE INC. ASSUMES NO RESPONSIBILITY FOR:

–FORM, FIT AND FUCTION OF CLOSURES
–SHELF LIFE AND/OR COMPATIBILITY OF INTENDED CONTENTS WITH THIS BOTTLE.

'T' AND 'E' DIMENSIONS ARE THE AVERAGE OF TWO MEASUREMENTS TAKEN 90° APART.

THE LIMITS OF OVALITY WILL BE DETERMINED PER APPICATION AS NECESSARY.

DIMENSIONS IN [ ] ARE IN MILLIMETERS
ALL OTHERS INDICATED ARE IN INCHES

This drawing subject to standard industry tolerances S.P.I.

CUSTOM BOTTLE APPROVAL:
APPROVED BY BP
DATE NOV. 23/10

CUSTOMER APPROVAL:
APPROVED BY .....
DATE .....

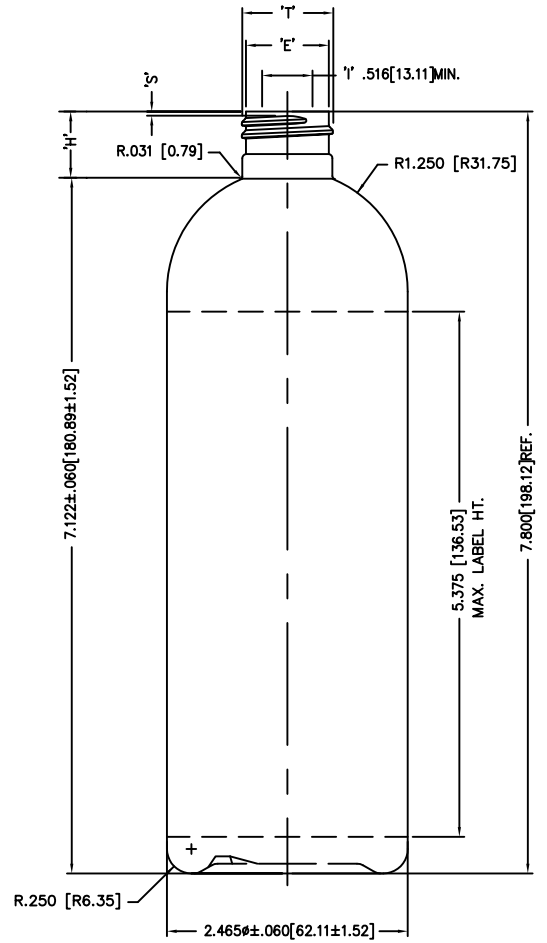

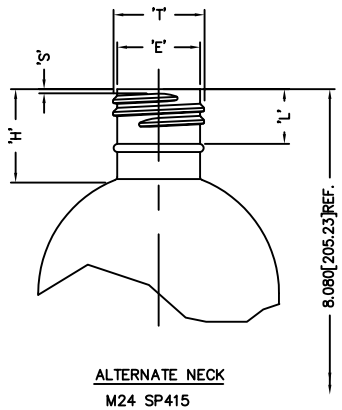

ALTERNATE NECK

M24 SP415

'T': .932±.008[23.67±.20]
'E': .848±.008[21.54±.20]
'H': .957±.015[24.30±.38]
'S': .046±.015[1.17±.38]

HELIX ∢ : 2°34'
T.P.I.: 8

GRAM WT.: 32±1.5
O/F/C: 508ml±11

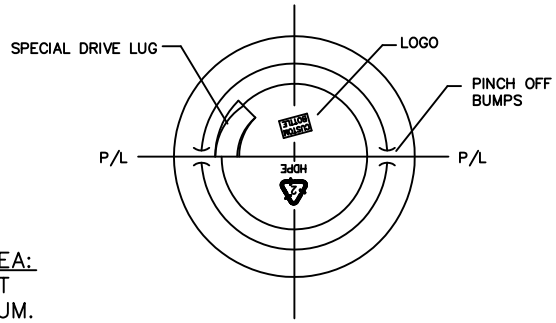

SILK SCREEN PRINTING AREA:
5.375 [13.65] MAX. HEIGHT
7.500 [190.50] MAX. CIRCUM.
(ALLOWS FOR .312 [7.92] BREAK IN COPY)

NO.	REV.BY	DESCRIPTION	DATE

NECK FINISH: M24 SP410			GRAM WT. 31±2.0		
'T'	'E'	'H'	'S'	'L'	'I'
.932 ±.008	848 ±.008	.646 ±.015	.046 ±.015	.437 MIN.	———
23.67 ±0.20	21.54 ±0.20	16.41 ±0.38	1.17 ±0.38	11.10 MIN.	———
HELIX ∢: 2° 34'		T.P.I.: 8	CUTT. DIA.: .375[9.53]		
OVERFLOW CAPACITY BEFORE DECORATING 508ml ±11					

CUSTOM BOTTLE

Custom Bottle Inc.
10 Great Hill Road
P.O. Box 720
Naugatuck, Connecticut 06770
203–723–6661

DRAWN BY: 1130	DESC.: 16oz COSMO
SCALE: 1–1 DATE: FEB.27/06	DRAWING NO.: 107–7252–STOCK
BOTTLE MAT'L: HDPE	1
C.B.I.D.: #35	MOULD NO.: