NECK FINISH	M28 SP410	M28 SP400 SHRINK BAND
MATERIAL	HDPE	HDPE
BOTTLE WEIGHT ±1.5gr	29.5	29.5
OVERFLOW CAPACITY±11cc	505ml±11	505ml±11

DISCLAIMER: CUSTOM BOTTLE INC. ASSUMES NO RESPONSIBILITY FOR:

–FORM, FIT AND FUCTION OF CLOSURES
–SHELF LIFE AND/OR COMPATIBILITY OF INTENDED CONTENTS WITH THIS BOTTLE.

'T' AND 'E' DIMENSIONS ARE THE AVERAGE OF TWO MEASUREMENTS TAKEN 90° APART.

THE LIMITS OF OVALITY WILL BE DETERMINED PER APPICATION AS NECESSARY.

DIMENSIONS IN [ ] ARE IN MILLIMETERS
ALL OTHERS INDICATED ARE IN INCHES

This drawing subject to standard industry tolerances S.P.I.

CUSTOM BOTTLE APPROVAL:
APPROVED BY BP
DATE NOV. 23/10

CUSTOMER APPROVAL:
APPROVED BY .....
DATE .....

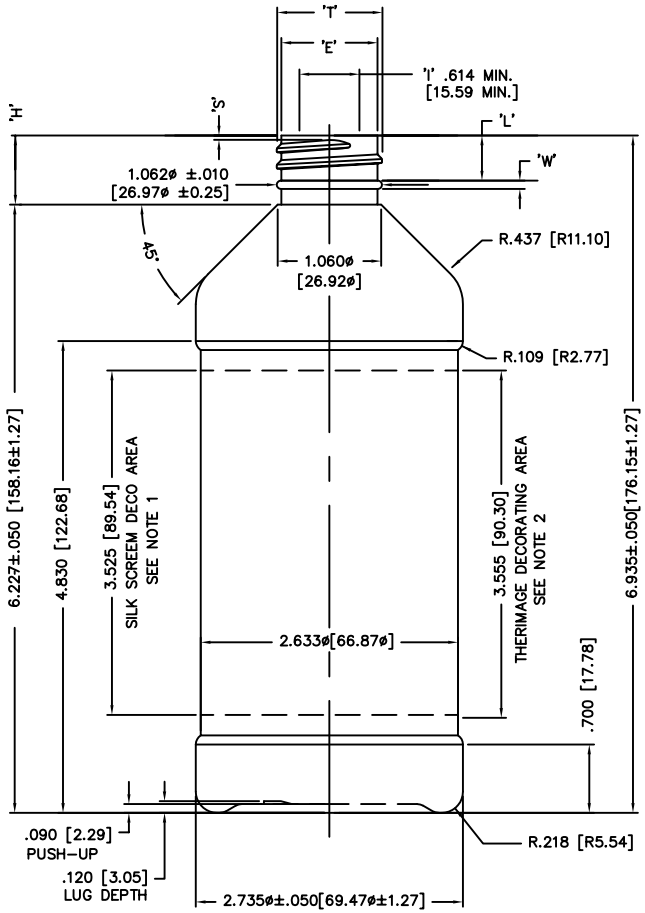

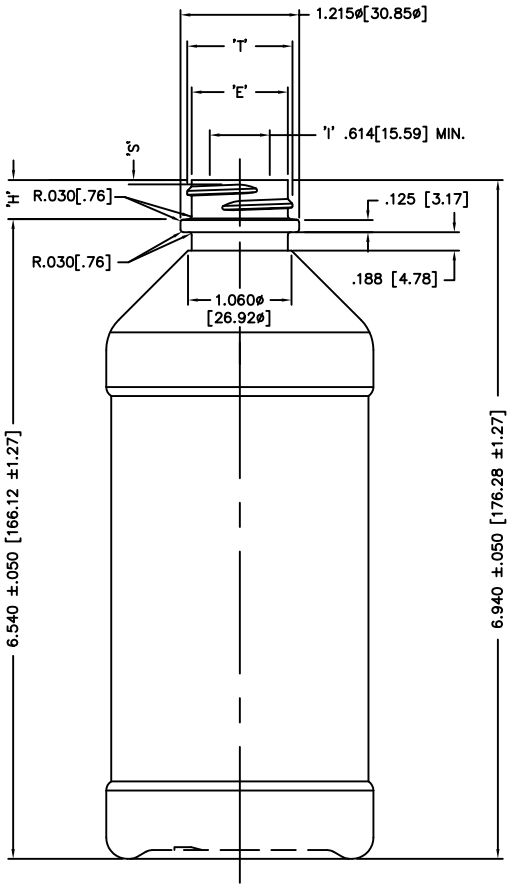

NOTES:
1. SILK SCREEN PRINTING AREA 3.525" MAX. HEIGHT (CIRCUMFERENCE ALLOWS FOR 5/16" BREAK IN COPY)
2. THERIMAGE PRINTING AREA 3.555" MAX. HEIGHT 7.768 MAX.(CIRCUMFERENCE ALLOWS FOR 3/8" BREAK IN COPY)

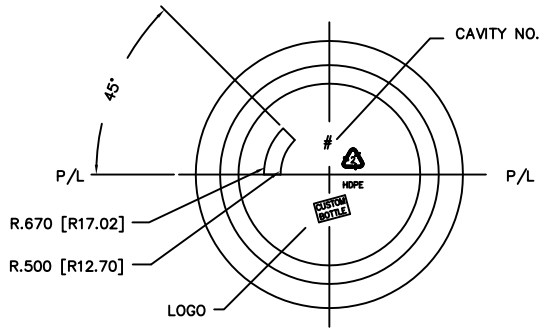

ALTERNATE NECK
M28 SP400 SHRINK BAND NECK FINISH

'T' 1.078±.010[27.38±.25]
'E' .984±.010[25.01±.30]
'H' .400±.015[1.01±.38]
'S' .046±.010[1.19±.25]

HELIX <: 2°57'
T.P.I.: 6
CUTT. DIA.: .500[12.70]

NO.	REV.BY	DESCRIPTION	DATE

NECK FINISH: M28 SP410 | GRAM WT. AS NOTED

'T'	'E'	'H'	'S'	'L'	'I'
1.078 ±.010	.984 ±.010	.708 ±.015	.046 ±.015	.463 MIN.	_____
27.38 ±0.25	24.99 ±0.25	17.98 ±0.38	1.17 ±0.38	11.94 MIN.	_____

HELIX <: 2° 57' | T.P.I.: 6 | CUTT. DIA.: .500[12.70]

OVERFLOW CAPACITY BEFORE DECORATING AS NOTED

CUSTOM BOTTLE
Custom Bottle Inc.
10 Great Hill Road
P.O. Box 720
Naugatuck, Connecticut 06770
203-723-6661

DRAWN BY: 1130
SCALE: 1-1 | DATE: JULY.9/02
BOTTLE MAT'L: HDPE
C.B.I.D.: #372

DESC.: 16oz MODERN RD.
DRAWING NO.: 1 107-5222-STOCK(2)
MOULD NO.: