DISCLAIMER: CUSTOM BOTTLE INC. ASSUMES NO RESPONSIBILITY FOR:

–FORM, FIT AND FUCTION OF CLOSURES
–SHELF LIFE AND/OR COMPATIBILITY OF INTENDED CONTENTS WITH THIS BOTTLE.

'T' AND 'E' DIMENSIONS ARE THE AVERAGE OF TWO MEASUREMENTS TAKEN 90° APART.

THE LIMITS OF OVALITY WILL BE DETERMINED PER APPICATION AS NECESSARY.

DIMENSIONS IN [ ] ARE IN MILLIMETERS
ALL OTHERS INDICATED ARE IN INCHES

This drawing subject to standard industry tolerances S.P.I.

CUSTOM BOTTLE APPROVAL:

APPROVED BY BP

DATE APR. 29/10

CUSTOMER APPROVAL:

APPROVED BY .....

DATE .....

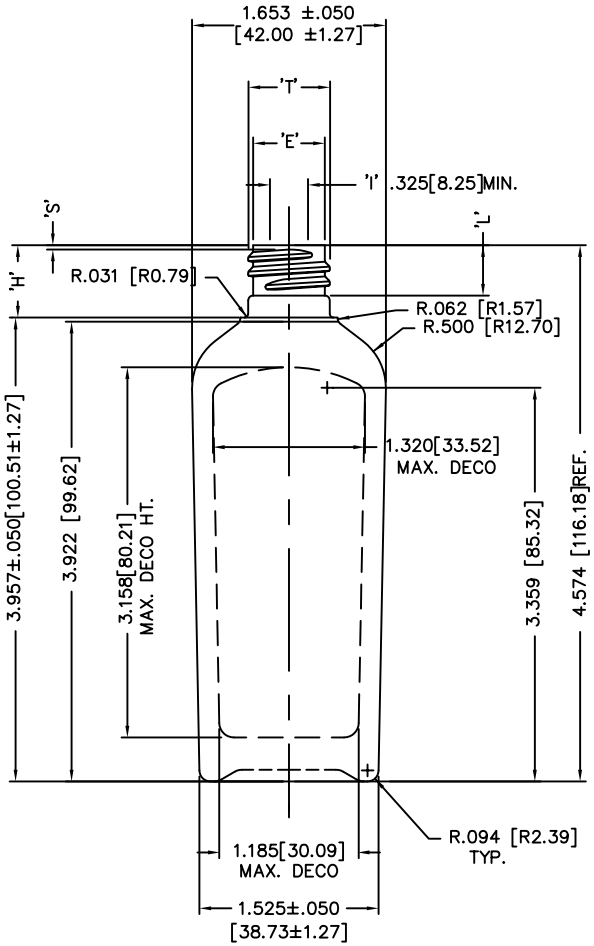

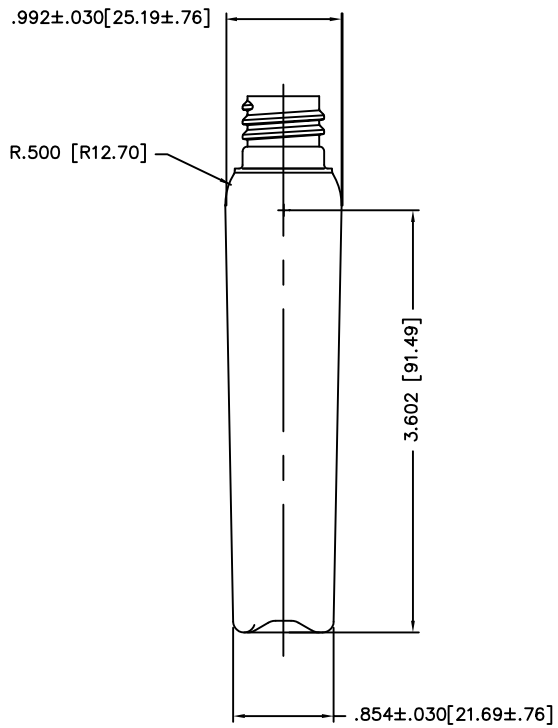

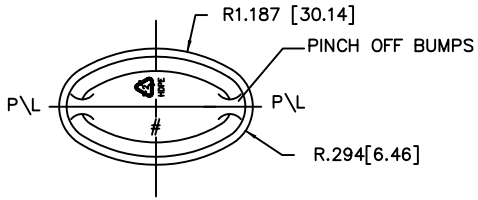

NO.	REV.BY	DESCRIPTION	DATE

NECK FINISH: M18–SP415 | GRAM WT. 11±1.0

'T'	'E'	'H'	'S'	'L'	'I'
.696 ±.008	.612 ±.008	.617 ±.015	.037 ±.015	.429 MIN	———
17.68 ±0.15	15.54 ±0.15	15.67 ±0.38	0.94 ±0.38	10.89 MIN.	———

HELIX ∡: 3° 30' | T.P.I.: 8 | CUTT. DIA.: .375[9.53]

OVERFLOW CAPACITY BEFORE DECORATING 65.0ml±3

CUSTOM BOTTLE

Custom Bottle Inc.
10 Great Hill Road
P.O. Box 720
Naugatuck, Connecticut 06770
203–723–6661

DRAWN BY:

SCALE: 1–1 | DATE:

BOTTLE MAT'L: HDPE

C.B.I.D.: #157

DESC.: 2oz ELLIPSE OVAL

DRAWING NO.: 1 107–7258–STOCK–1

MOULD NO.: