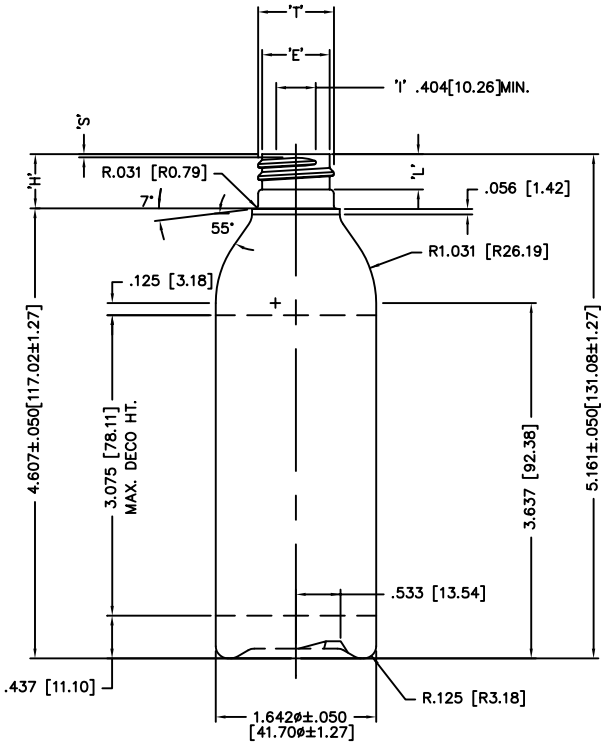

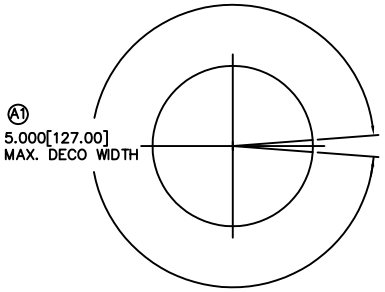

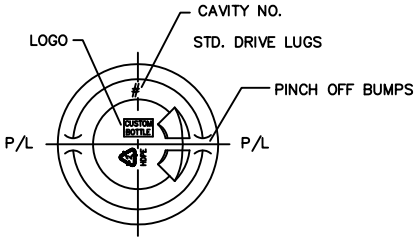

CUSTOM BOTTLE APPROVAL:

NECK FINISH .....

WEIGHT .....

CAPACITY .....

MATERIAL .....

SPECIAL REQUESTS .....

APPROVED

CUSTOMER APPROVAL:

APPROVED BY .....

DATE .....

NO.	REV.BY	DESCRIPTION	DATE
B1	CDL	DIMENSION ADDED	JUNE 20/06
A1	CDL	MAX. DECO WIDTH WAS 5.034	JULY13/04

NECK FINISH: M20 SP410 GRAM WT. 15 ±1.0

'T'	'E'	'H'	'S'	'L'	'I' B1
.775 ±.008	.691 ±.008	.554 ±.015	.037 ±.015	.361 MIN	.404 MIN
19.69 ±0.20	17.55 ±0.20	14.07 ±0.38	0.94 ±0.38	9.14 MIN.	10.26 MIN.

HELIX ∢: 3° 7' T.P.I.: 8 CUTT. DIA.: .375 [9.53]

CAPACITY TO FILL LEVEL BEFORE DECORATING 118ml±5

CAPACITY TO FILL LEVEL AFTER DECORATING ——

OVERFLOW CAPACITY BEFORE DECORATING 136.2ml±5

OVERFLOW CAPACITY AFTER DECORATING ——

Custom Bottle Inc.
10 Great Hill Road
P.O. Box 720
Naugatuck, Connecticut 06770
203-723-6681

DRAWN BY: DS

SCALE: 1-1 DATE: JULY.8/04

BOTTLE MAT'L: HDPE

CAD NAME: PD\6XXX\107-6277

DESC.: 4oz. MILLENIUM RD.

DRAWING NO.: 107-6277-PB

1

C.B.I.D.: #277

This drawing subject to standard industry tolerances S.P.I.