DISCLAIMER: CUSTOM BOTTLE INC. ASSUMES NO RESPONSIBILITY FOR:

–FORM, FIT AND FUCTION OF CLOSURES
–SHELF LIFE AND/OR COMPATIBILITY OF INTENDED CONTENTS WITH THIS BOTTLE.

'T' AND 'E' DIMENSIONS ARE THE AVERAGE OF TWO MEASUREMENTS TAKEN 90° APART.

THE LIMITS OF OVALITY WILL BE DETERMINED PER APPICATION AS NECESSARY.

DIMENSIONS IN [ ] ARE IN MILLIMETERS
ALL OTHERS INDICATED ARE IN INCHES

This drawing subject to standard industry tolerances S.P.I.

CUSTOM BOTTLE APPROVAL:
APPROVED BY BP
DATE APR. 29/10

CUSTOMER APPROVAL:
APPROVED BY .....
DATE .....

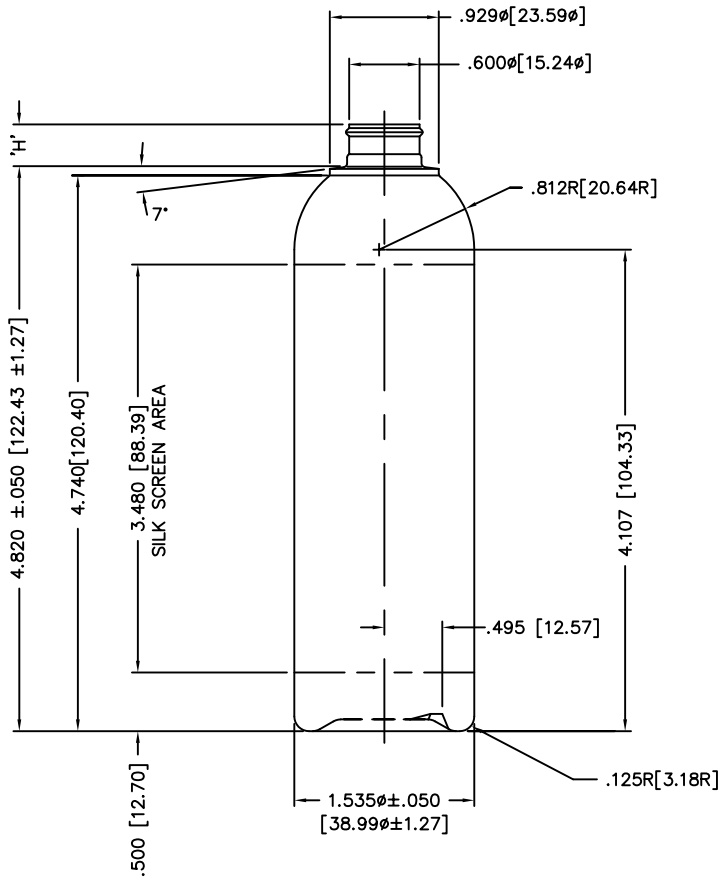

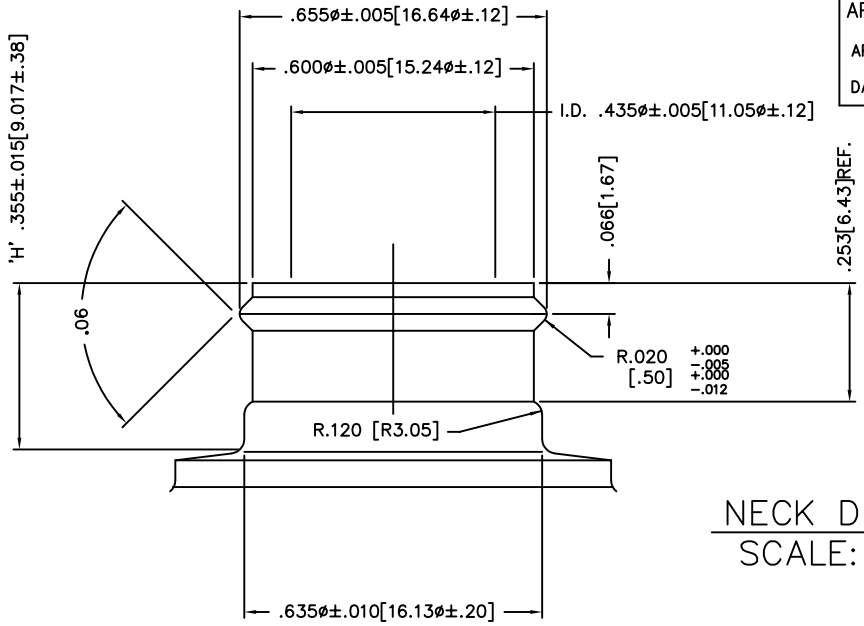

NECK DETAIL
SCALE: 4–1

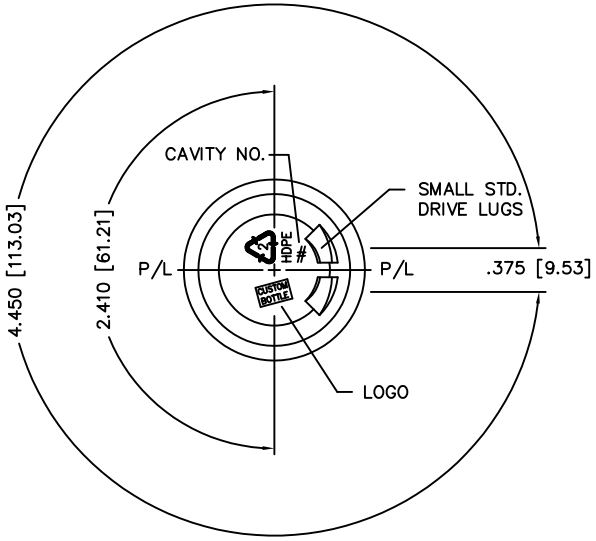

NO.	REV.BY	DESCRIPTION	DATE

NECK FINISH: 16mm CRIMP | GRAM WT. 13±1.5

'T'	'E'	'H'	'S'	'L'	'I'

HELIX ∢: _____ T.P.I.: _____ CUTT. DIA.: _____

OVERFLOW CAPACITY BEFORE DECORATING 127ml±5

CUSTOM BOTTLE

Custom Bottle Inc.
10 Great Hill Road
P.O. Box 720
Naugatuck, Connecticut 06770
203–723–6661

DRAWN BY: 1130
SCALE: 1–1 DATE: APR.30/04
BOTTLE MAT'L: HDPE
C.B.I.D.: #124

DESC.: 4oz TALL COSMO
DRAWING NO.: 107–6190–STOCK
1
MOULD NO.: