DISCLAIMER: CUSTOM BOTTLE INC. ASSUMES NO RESPONSIBILITY FOR:

–FORM, FIT AND FUCTION OF CLOSURES
–SHELF LIFE AND/OR COMPATIBILITY OF INTENDED CONTENTS WITH THIS BOTTLE.

'T' AND 'E' DIMENSIONS ARE THE AVERAGE OF TWO MEASUREMENTS TAKEN 90° APART.

THE LIMITS OF OVALITY WILL BE DETERMINED PER APPICATION AS NECESSARY.

DIMENSIONS IN [ ] ARE IN MILLIMETERS
ALL OTHERS INDICATED ARE IN INCHES

This drawing subject to standard industry tolerances S.P.I.

CUSTOM BOTTLE APPROVAL:

APPROVED BY BP

DATE DEC. 7/10

CUSTOMER APPROVAL:

APPROVED BY .....

DATE .....

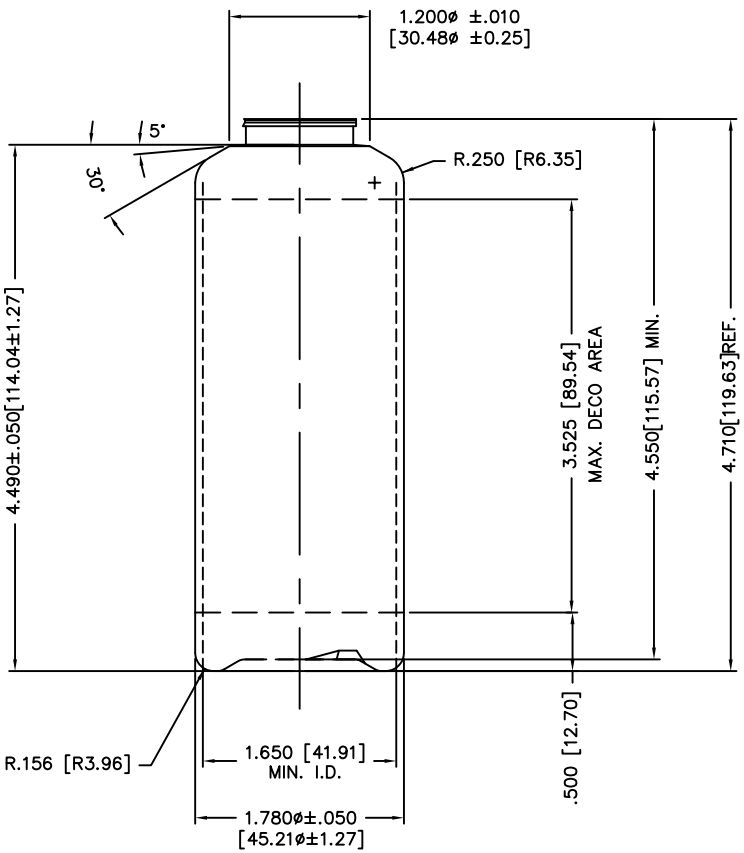

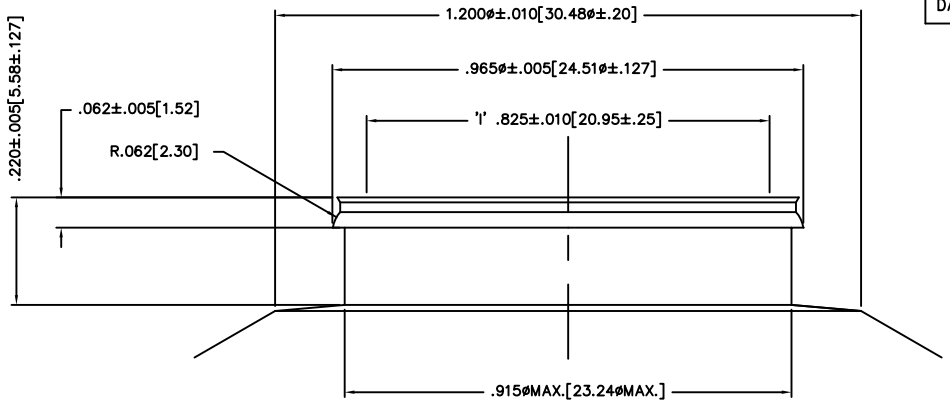

NECK DETAIL
SCALE 5–1

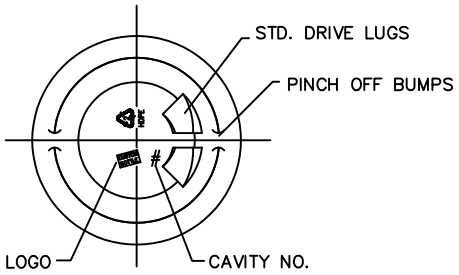

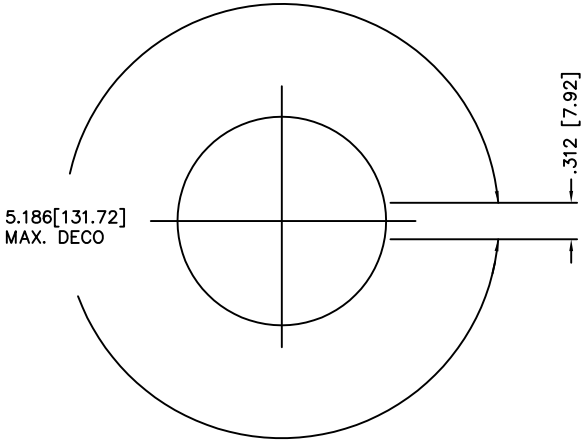

NO.	REV.BY	DESCRIPTION	DATE

NECK FINISH: 28mm CRIMP | GRAM WT. 16±1.5

'T'	'E'	'H'	'S'	'L'	'l'

HELIX ∢: _____ T.P.I.: _____ CUTT. DIA.: _____

OVERFLOW CAPACITY BEFORE DECORATING 163ml±6

CUSTOM BOTTLE

Custom Bottle Inc.
10 Great Hill Road
P.O. Box 720
Naugatuck, Connecticut 06770
203–723–6661

DRAWN BY: 1130

SCALE: 1–1 DATE: JULY.13/07

BOTTLE MAT'L: HDPE

C.B.I.D.: #193

DESC.: 70ml ROUND SHOULDER

DRAWING NO.: 107–7896–STOCK 1

MOULD NO.: